REVISIONS				
ECO	REV.	DESCRIPTION	DATE	INC.
	A	RELEASED	2/27/2004	

SOLATUBE 160DS INCANDESCENT LIGHT HARD CEILING

NOTES:

1. DIMENSIONS IN BRACKETS ARE METRIC UNLESS OTHERWISE SPECIFIED.
2. 6" MINIMUM CLEARANCE SHOULD BE MAINTAINED FROM ALL SOLATUBE COMPONENTS AND OTHER PLENUM ELEMENTS.

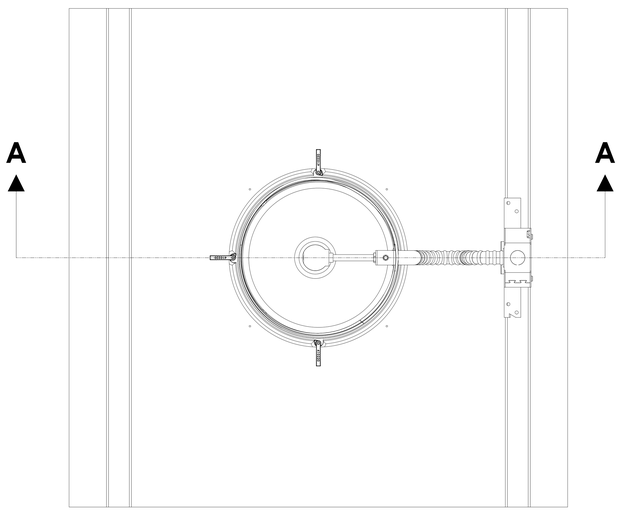

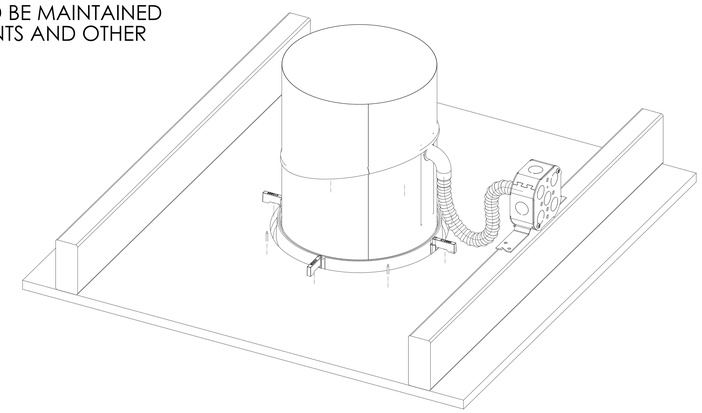

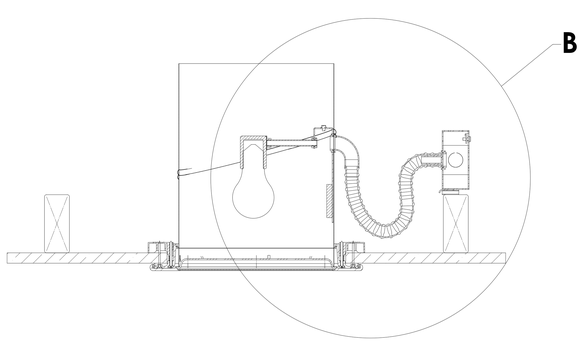

SECTION A-A

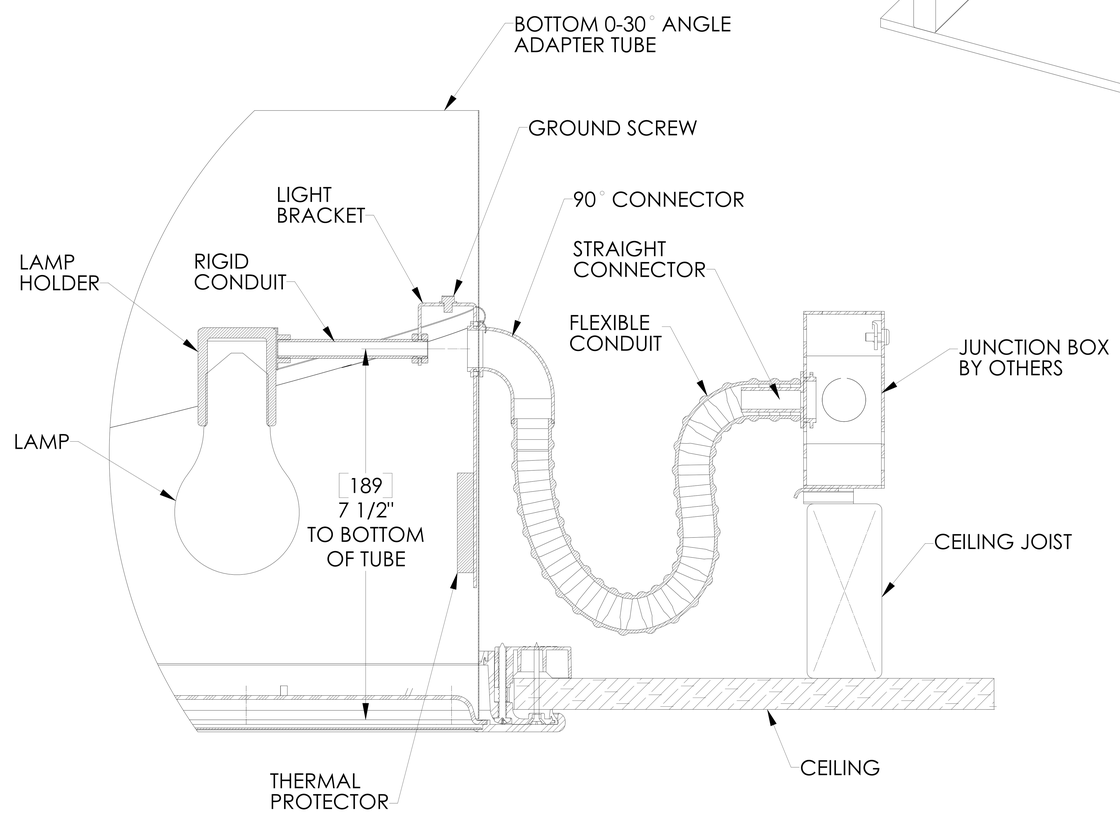

DETAIL B
SCALE 3 : 1

UNLESS OTHERWISE SPECIFIED:
DIMENSION TOLERANCE
FRACTION : ±1/4"
INCH .X ± .1 | MILLIMETER [.X] ± 2.5

DO NOT SCALE DRAWING

SOLATUBE INTERNATIONAL, INC.
COPYRIGHT 2006
WWW.SOLATUBE.COM

MATERIAL: -- --
FINISH: --

DRAWN BY: STEVENS — DATE: 11/2/06
CHECKED BY: -- — DATE: --
APPROVED BY: GOODJOHN — DATE: 11/7/06

SOLATUBE®
2210 OAK RIDGE WAY
VISTA, CALIFORNIA 92081-8341
PH (760) 597-4400

TITLE: SOLATUBE 160DS INCANDESCENT LIGHT

SIZE: D | DWG. NO. 160DS-HC-INCAN | REV A

SCALE: 1:1 | SHEET 1 OF 1