REVISIONS				
ECO	REV.	DESCRIPTION	DATE	INC.
	A	RELEASED	2/27/2004	

SOLATUBE 160DS SELF-FLASHING HARD CEILING W/DAYLIGHT DIMMER

NOTES:

1. DIMENSIONS IN BRACKETS ARE METRIC UNLESS OTHERWISE SPECIFIED.
2. 6" MINIMUM CLEARANCE SHOULD BE MAINTAINED FROM ALL SOLATUBE COMPONENTS AND OTHER PLENUM ELEMENTS.

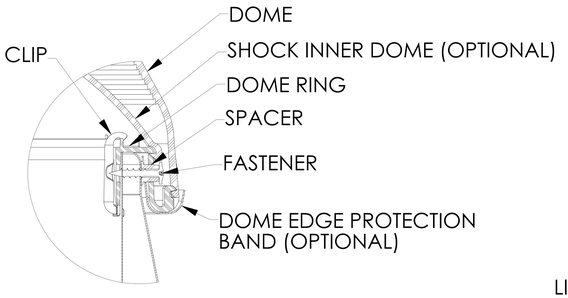

DETAIL A
SCALE 3 : 1

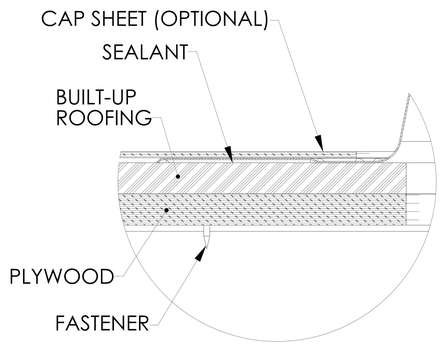

DETAIL B
SCALE 3 : 1

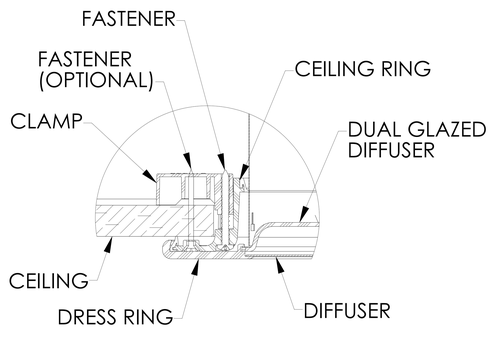

DETAIL C
SCALE 3 : 1

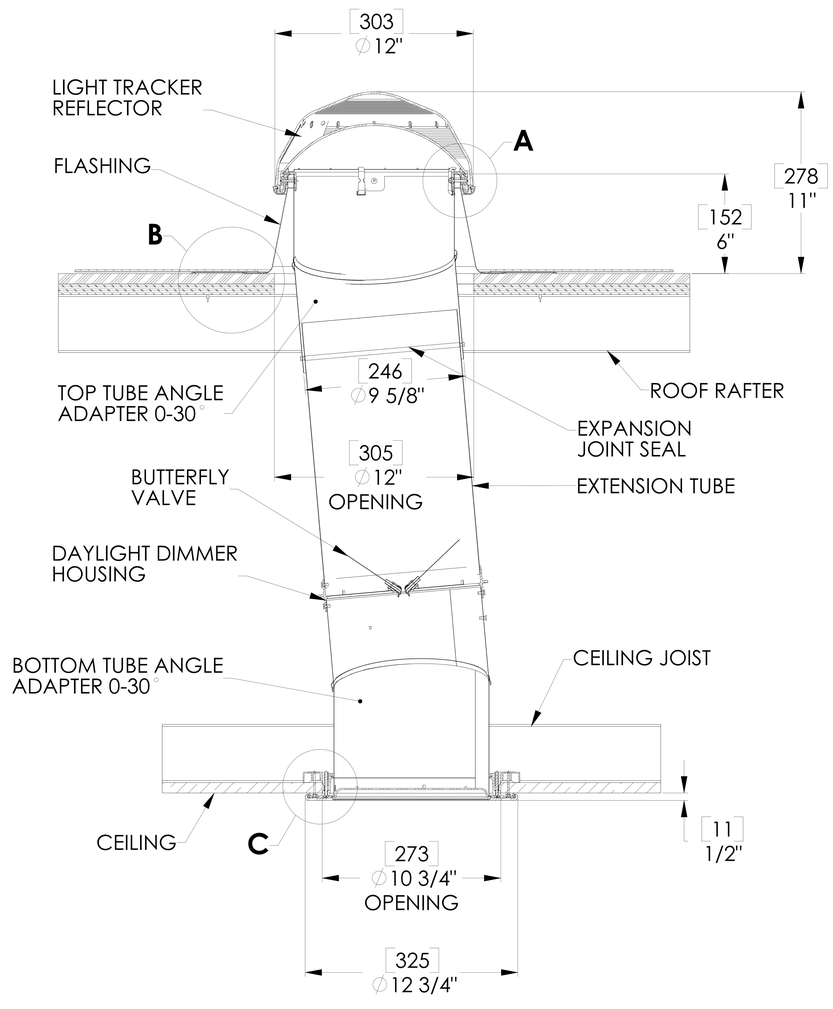

FULL SECTION
SCALE 1:1

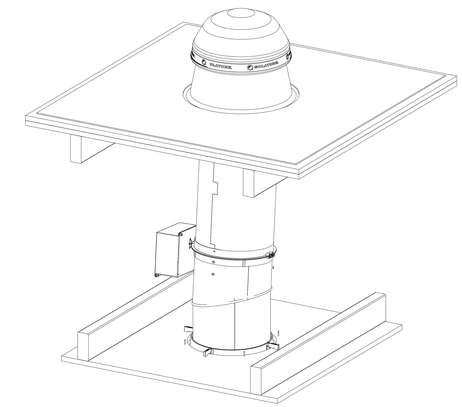

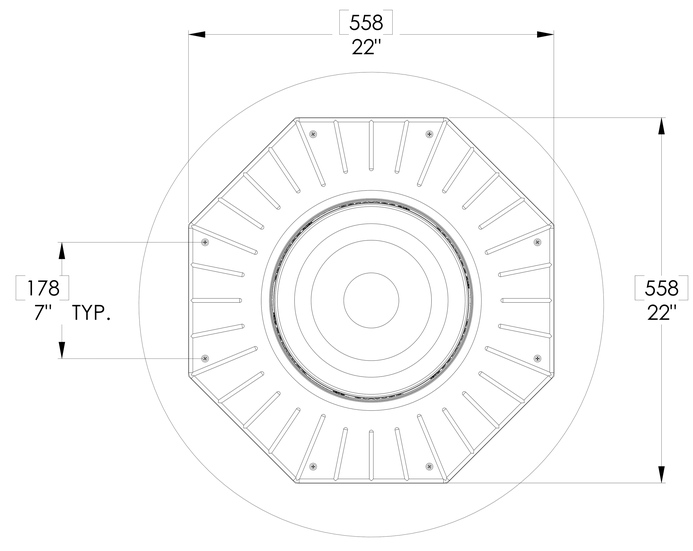

TOP VIEW

UNLESS OTHERWISE SPECIFIED:
DIMENSION TOLERANCE
FRACTION : ±1/4"
INCH .X ± .1 MILLIMETER [.X] ± 2.5

MATERIAL
--
--

FINISH
--

DO NOT SCALE DRAWING

SOLATUBE INTERNATIONAL, INC.
COPYRIGHT 2006
WWW.SOLATUBE.COM

DRAWN BY STEVENS — DATE 11/2/06
CHECKED BY -- — DATE --
APPROVED BY GOODJOHN — DATE 11/7/06

SOLATUBE
2210 OAK RIDGE WAY
VISTA, CALIFORNIA 92081-8341
PH (760) 597-4400

TITLE: SOLATUBE 160DS SELF-FLASHING HARD CEILING W/ DAYLIGHT DIMMER

SIZE D — DWG. NO. 160DS-HC-SF6-DD — REV A
SCALE: 1:1 — SHEET 1 OF 1