SOLATUBE 160 DS
PITCHED SELF-FLASHING
HARD CEILING W/VENT UNIT

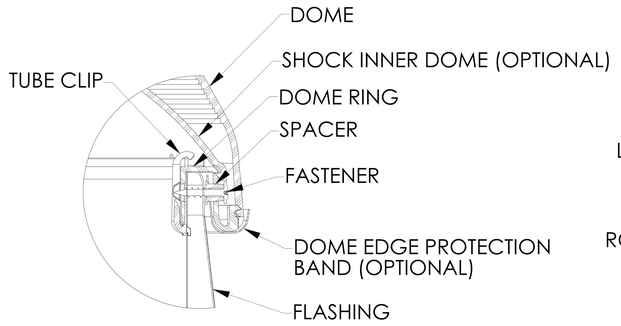

DETAIL A
SCALE 3 : 1

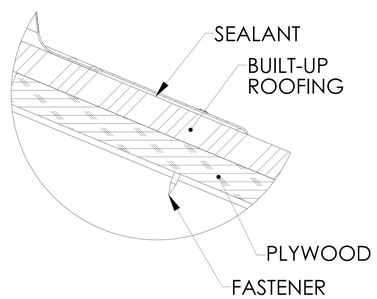

DETAIL B
SCALE 3 : 1

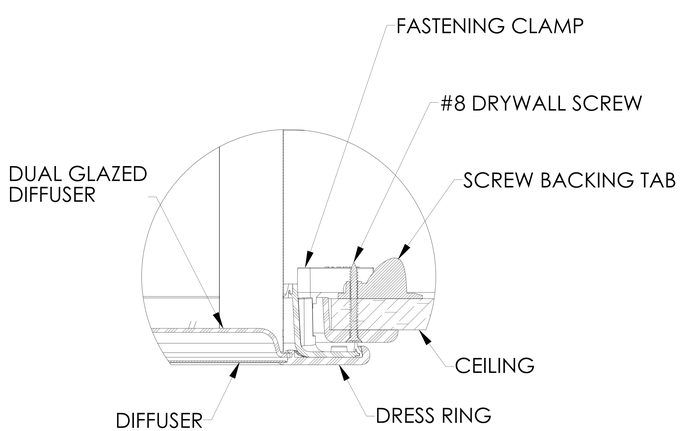

DETAIL C
SCALE 3 : 1

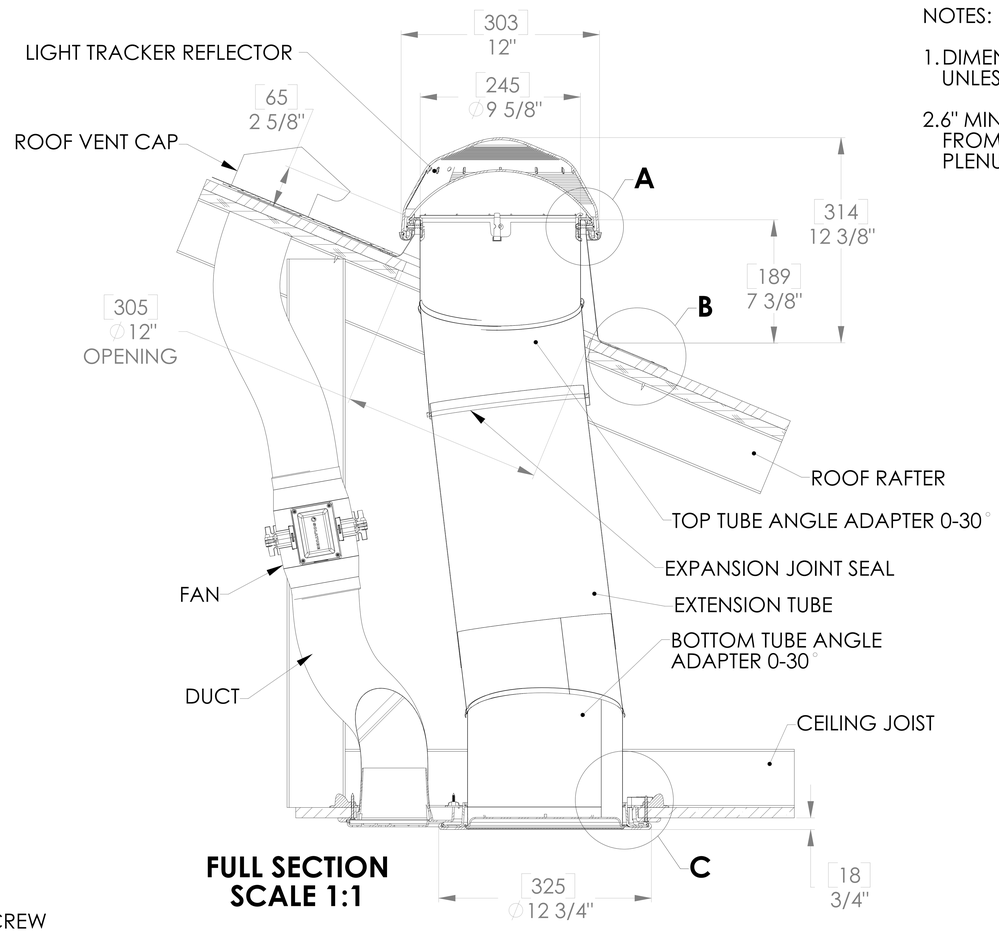

FULL SECTION
SCALE 1:1

NOTES:

1. DIMENSIONS IN BRACKETS ARE METRIC UNLESS OTHERWISE SPECIFIED.
2. 6" MINIMUM CLEARANCE SHOULD BE MAINTAINED FROM ALL SOLATUBE COMPONENTS AND OTHER PLENUM ELEMENTS.

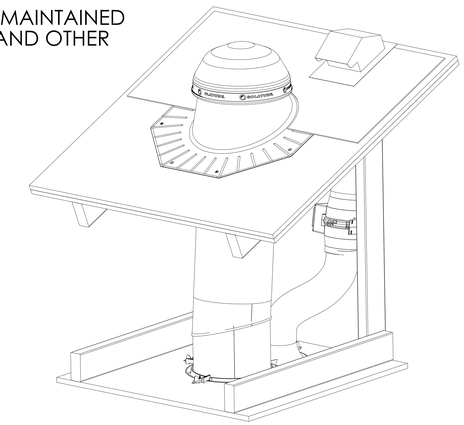

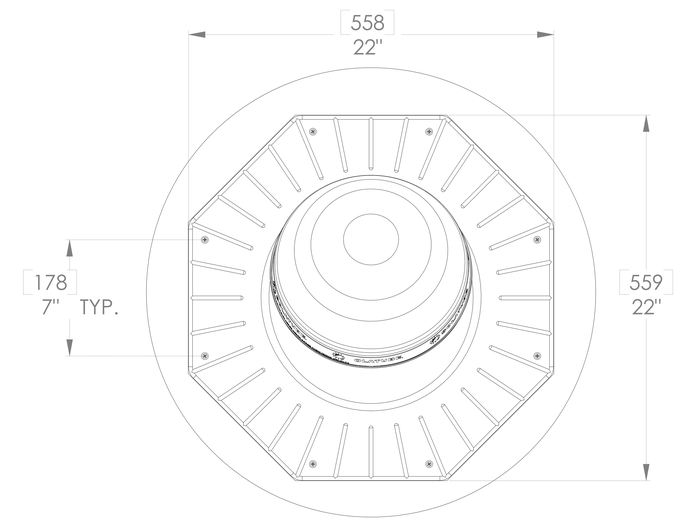

TOP VIEW

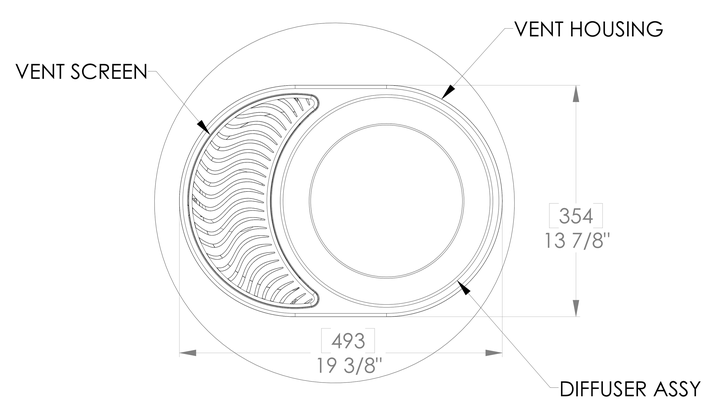

BOTTOM VIEW

SOLATUBE
2210 OAK RIDGE WAY
VISTA, CALIFORNIA 92081-8341
PH (760) 597-4400

TITLE: **160 DS PITCHED SELF FLASHING HARD CEILING W/ VENT UNIT**

SIZE	DWG. NO.	REV
D	160DS-HC-SFP-VENT	B
	SCALE: 1:1	SHEET 1 OF 1