SOLATUBE 21-C
CURB-MOUNT FLASHING
HARD CEILING
W/ DAYLIGHT DIMMER

REVISIONS				
ECO	REV.	DESCRIPTION	DATE	INC.
	A	RELEASED	2/27/2004	
1314	B	TITLE CHANGE	12/4/2006	CS

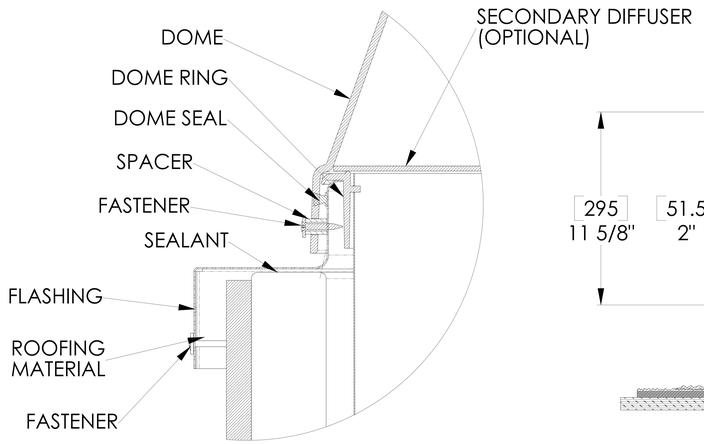

DETAIL A
SCALE 3 : 1

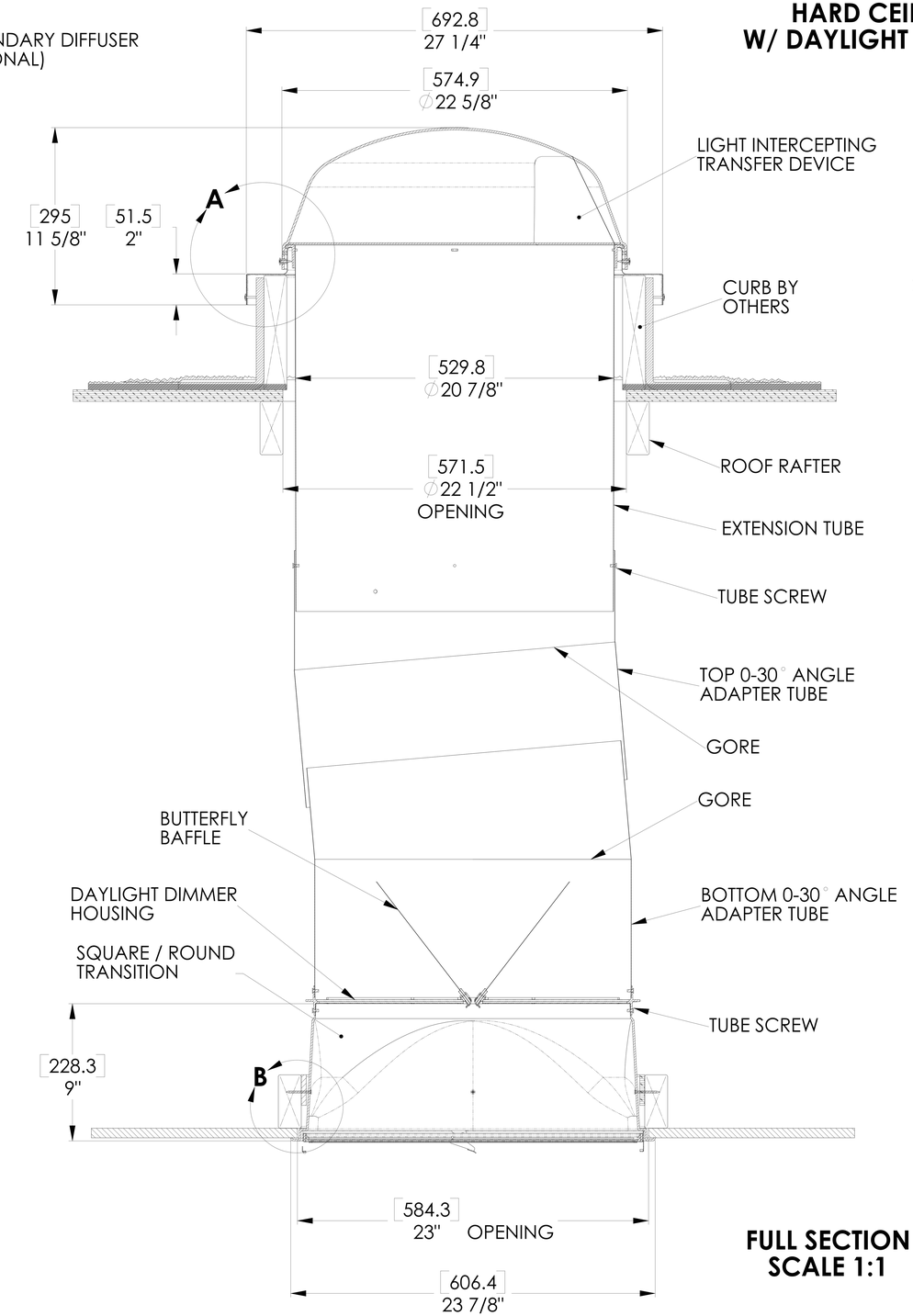

FULL SECTION
SCALE 1:1

NOTES:

1. DIMENSIONS IN BRACKETS ARE METRIC UNLESS OTHERWISE SPECIFIED.
2. 6" MIN. CLEARANCE SHOULD BE MAINTAINED FROM ALL SOLATUBE COMPONENTS AND OTHER PLENUM ELEMENTS.

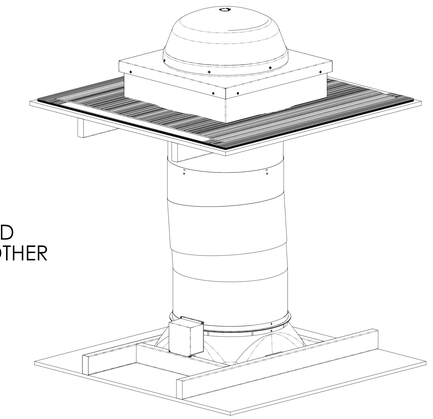

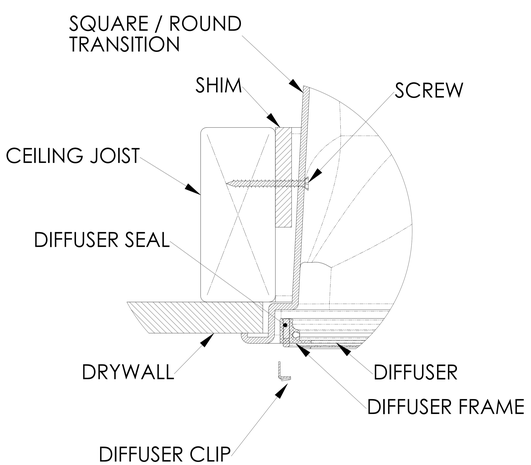

DETAIL B
SCALE 3 : 1

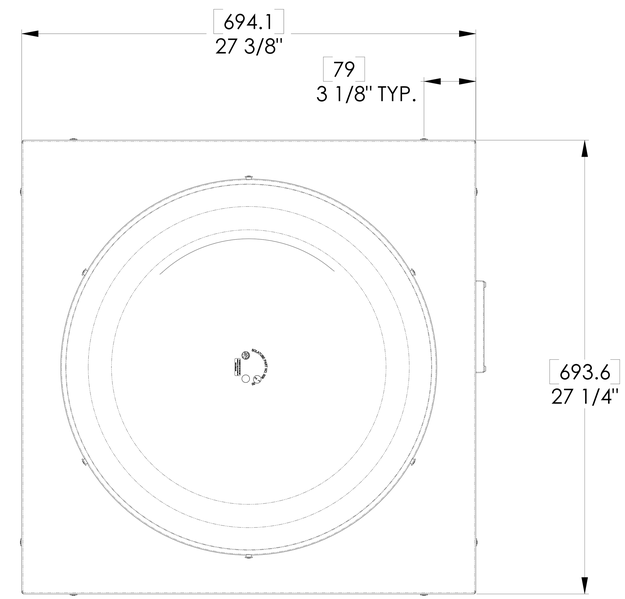

TOP VIEW
SCALE 1:1

UNLESS OTHERWISE SPECIFIED:		
DIMENSIONS ARE IN INCHES TOLERANCES: ANGULAR: ±0.5° .X ± .1 .XX ± .02 .XXX ± .005	SOLATUBE INTERNATIONAL, INC. COPYRIGHT 2002 WWW.SOLATUBE.COM	
MATERIAL -- --	DRAWN BY STEVENS	DATE 2/23/04
FINISH --	CHECKED BY --	DATE --
DO NOT SCALE DRAWING	APPROVED BY --	DATE --

SOLATUBE
2210 OAK RIDGE WAY
VISTA, CALIFORNIA 92081-8341
PH (760) 597-4400

TITLE: **21-C CURB-MOUNT FLASHING HARD CEILING W/ DD**

SIZE	DWG. NO.	REV
D	21-CF-HC-DD	B
	SCALE: 1:1	SHEET 1 OF 1