SOLATUBE 21-C
CURB-MOUNT FLASHING
SUSPENDED CEILING

REVISIONS				
ECO	REV.	DESCRIPTION	DATE	INC.
	A	RELEASED	2/25/2004	
1314	B	TITLE CHANGE	12/4/2006	CS

NOTES:

1. DIMENSIONS IN BRACKETS ARE METRIC UNLESS OTHERWISE SPECIFIED.
2. 6" MIN. CLEARANCE SHOULD BE MAINTAINED FROM ALL SOLATUBE COMPONENTS AND OTHER PLENUM ELEMENTS.

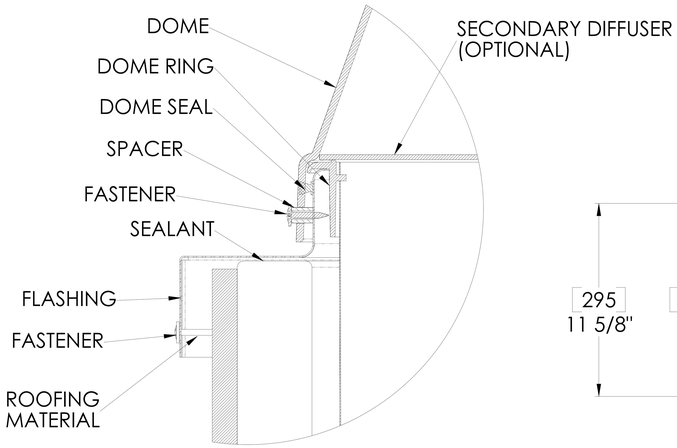

DETAIL A
SCALE 3 : 1

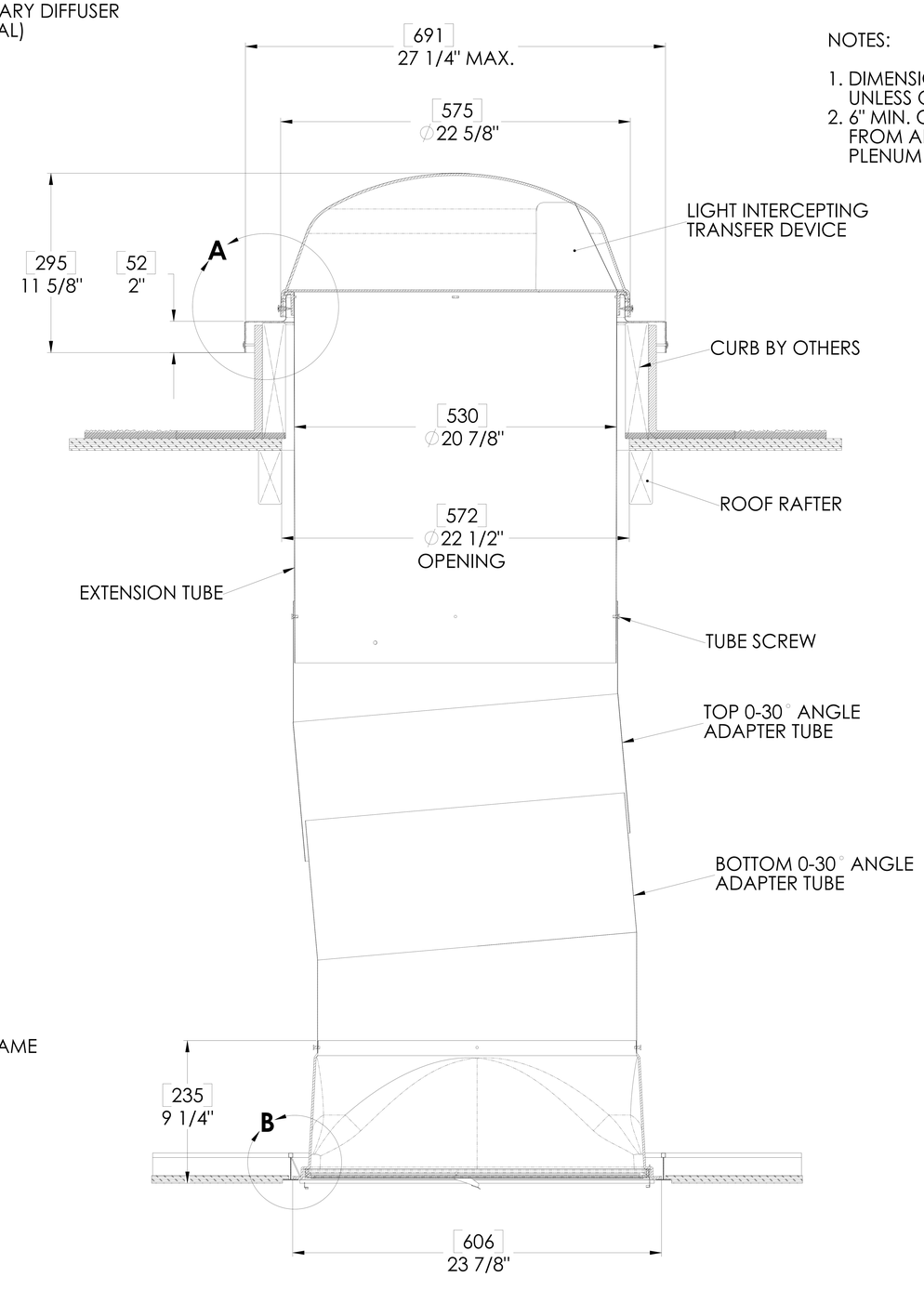

FULL SECTION
SCALE 1:1

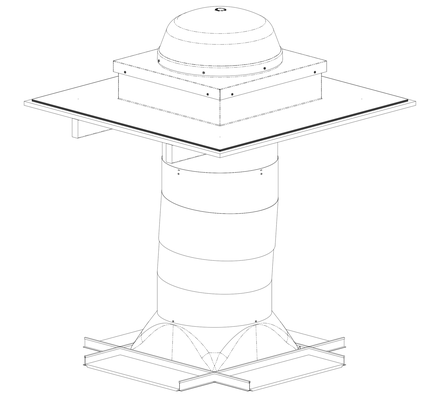

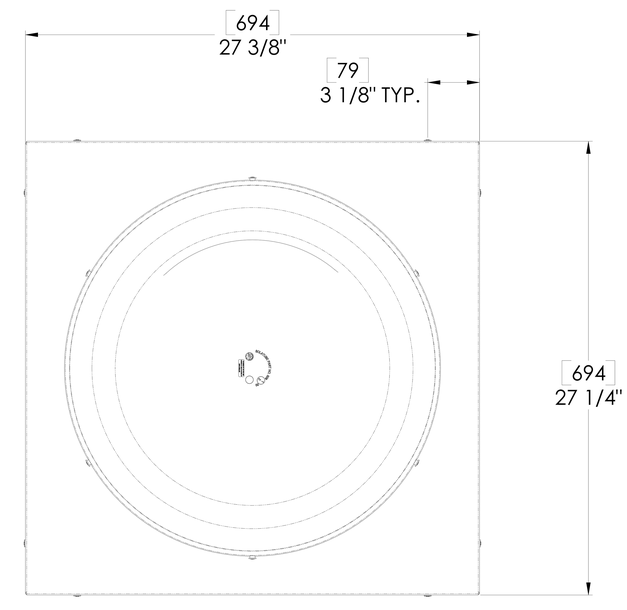

TOP VIEW
SCALE 1:1

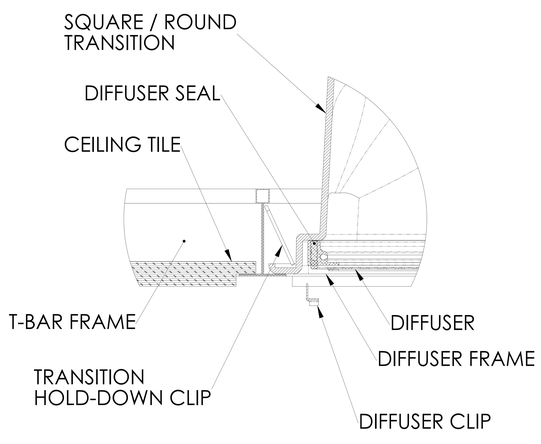

DETAIL B
SCALE 3 : 1

UNLESS OTHERWISE SPECIFIED:
DIMENSIONS ARE IN INCHES
TOLERANCES:
ANGULAR: ±0.5°
.X ± .1
.XX ± .02
.XXX ± .005

SOLATUBE INTERNATIONAL, INC.
COPYRIGHT 2002
WWW.SOLATUBE.COM

SOLATUBE
2210 OAK RIDGE WAY
VISTA, CALIFORNIA 92081-8341
PH (760) 597-4400

MATERIAL
--
--

FINISH
--

DO NOT SCALE DRAWING

DRAWN BY: STEVENS	DATE: 2/23/04	
CHECKED BY: --	DATE: --	
APPROVED BY: --	DATE: --	

TITLE:
21-C CURB-MOUNT FLASHING SUSPENDED CEILING

SIZE	DWG. NO.	REV
D	21-CF-SC	B
	SCALE: 1:1	SHEET 1 OF 1