SOLATUBE 21-C SELF-FLASHING SUSPENDED CEILING

REVISIONS				
ECO	REV.	DESCRIPTION	DATE	INC.
	A	RELEASED	2/27/2004	
1314	B	TITLE CHANGE	12/4/2006	CS

NOTES:

1. DIMENSIONS IN BRACKETS ARE METRIC UNLESS OTHERWISE SPECIFIED.
2. 6" MIN. CLEARANCE SHOULD BE MAINTAINED FROM ALL SOLATUBE COMPONENTS AND OTHER PLENUM ELEMENTS.

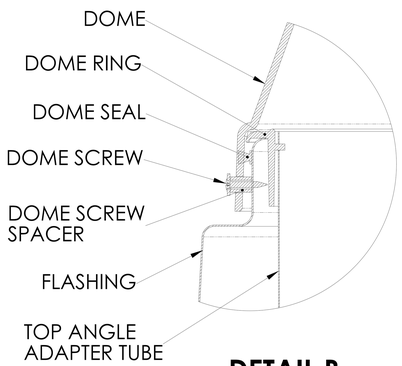

DETAIL B
SCALE 3 : 1

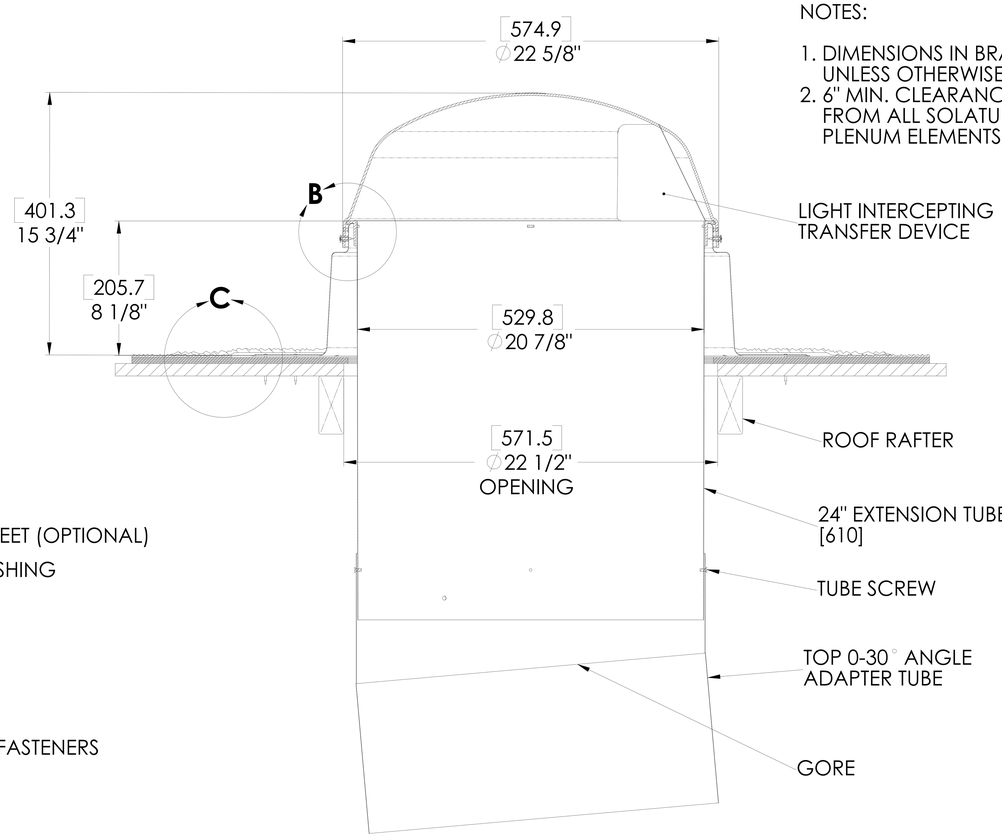

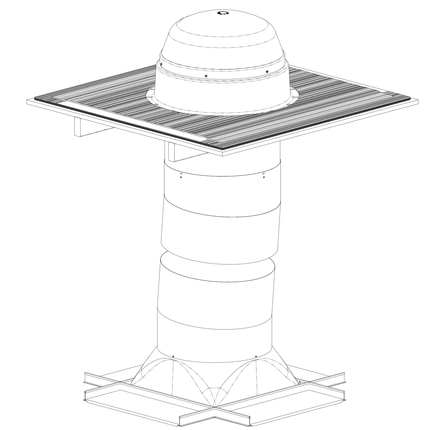

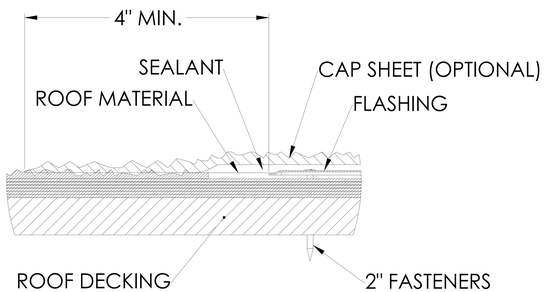

DETAIL C
SCALE 3 : 1

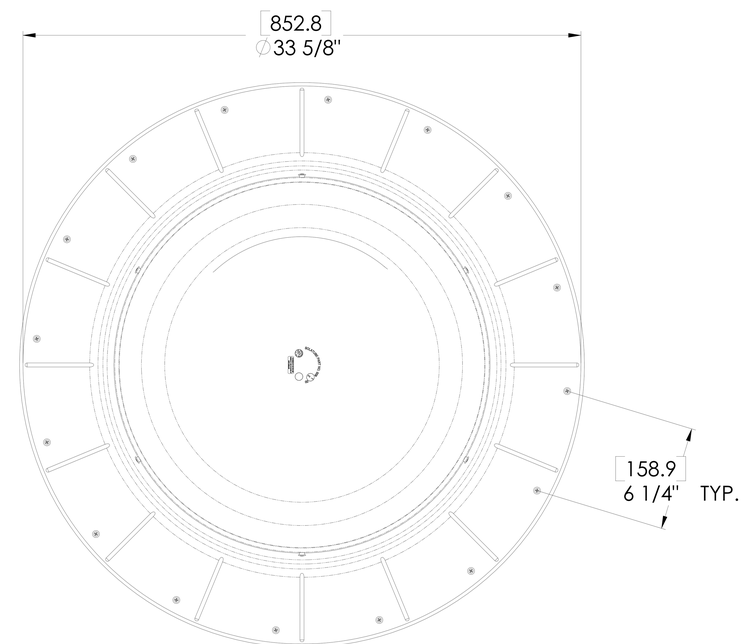

TOP VIEW
SCALE 1 : 1

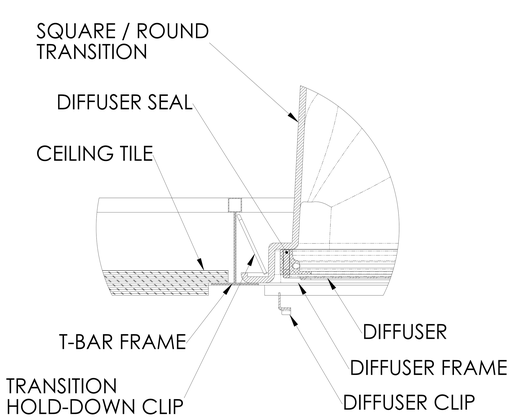

DETAIL D
SCALE 3 : 1

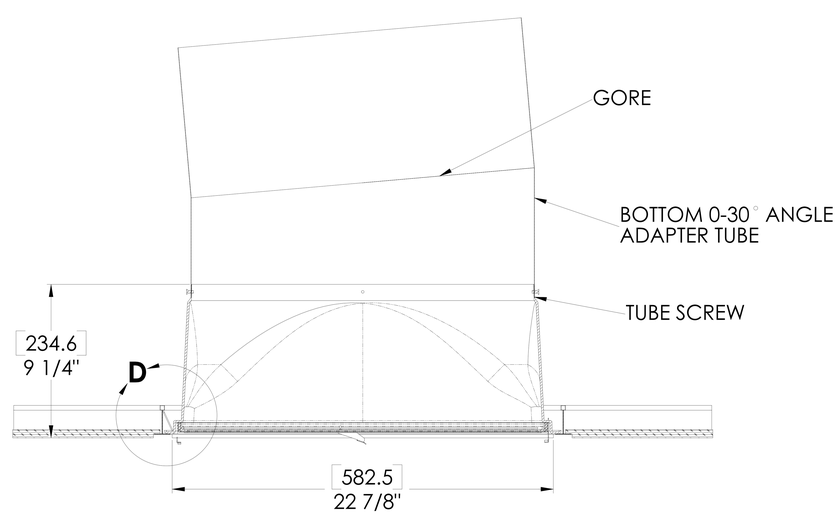

FULL SECTION
SCALE 1:1

UNLESS OTHERWISE SPECIFIED:	SOLATUBE INTERNATIONAL, INC. COPYRIGHT 2002 WWW.SOLATUBE.COM		SOLATUBE 2210 OAK RIDGE WAY VISTA, CALIFORNIA 92081-8341 PH (760) 597-4400	
DIMENSIONS ARE IN INCHES TOLERANCES: ANGULAR: ±0.5° .X ± .1 .XX ± .02 .XXX ± .005			TITLE: 21-C SELF-FLASHING SUSPENDED CEILING	
MATERIAL -- --	DRAWN BY STEVENS	DATE 2/23/04		
FINISH --	CHECKED BY --	DATE --	SIZE D	DWG. NO. 21-SF-SC / REV B
DO NOT SCALE DRAWING	APPROVED BY --	DATE --	SCALE: 1:1	SHEET 1 OF 1