REVISIONS				
ECO	REV.	DESCRIPTION	DATE	INC.
	A	RELEASED	9/12/07	

SOLATUBE 290DS PITCHED SELF-FLASHING HARD CEILING W/FROSTED SHADE

NOTES:

1. DIMENSIONS IN BRACKETS ARE METRIC UNLESS OTHERWISE SPECIFIED.
2. 6" MINIMUM CLEARANCE SHOULD BE MAINTAINED FROM ALL SOLATUBE COMPONENTS AND OTHER PLENUM ELEMENTS.

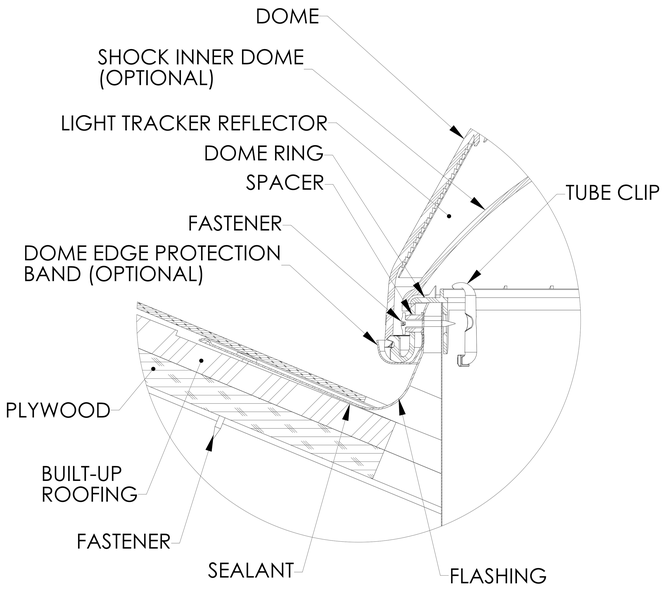

DETAIL A
SCALE 3 : 1

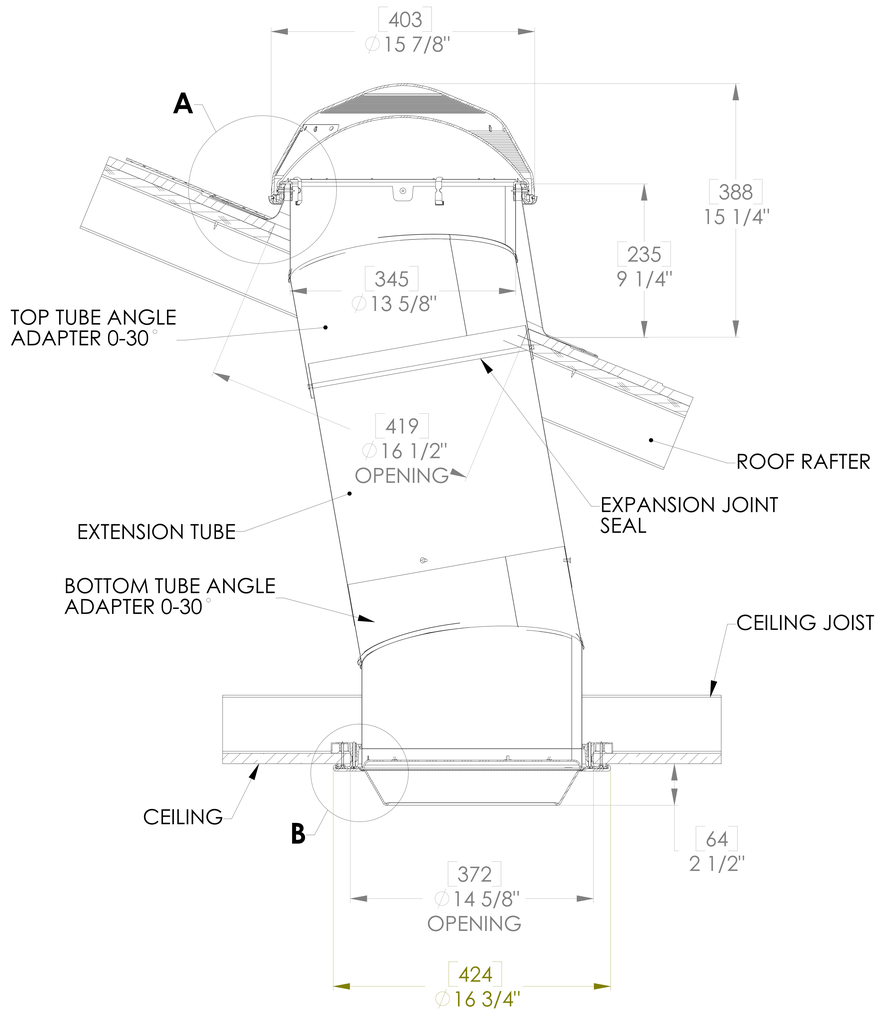

FULL SECTION
SCALE 1:1

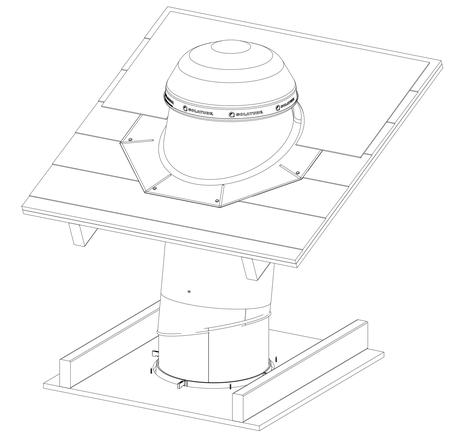

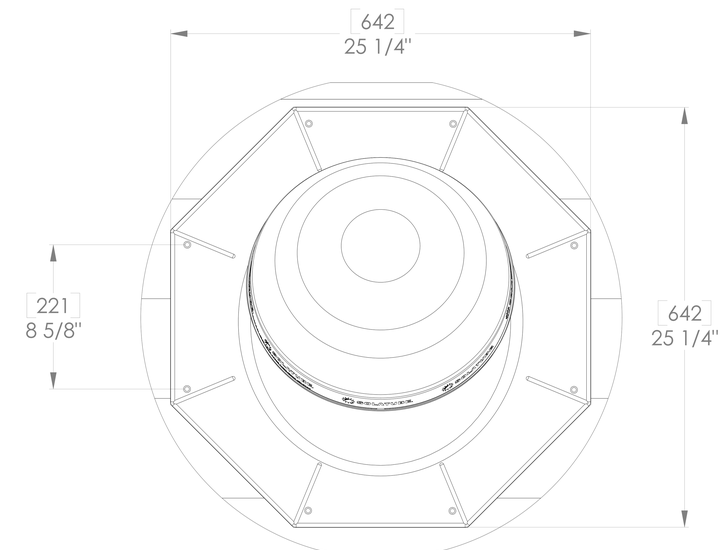

TOP VIEW

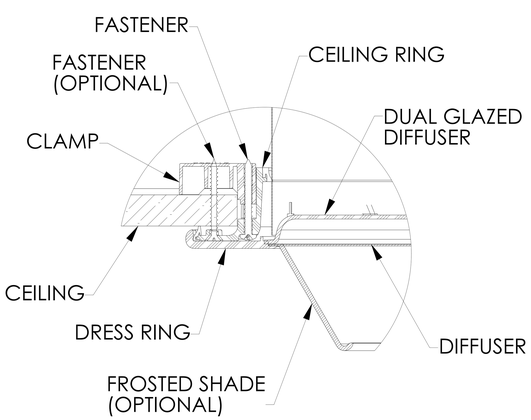

DETAIL B
SCALE 3 : 1

UNLESS OTHERWISE SPECIFIED:
DIMENSION TOLERANCE
FRACTION : ±1/4"
INCH .X ±.1 MILLIMETER [.X] ±2.5

SOLATUBE INTERNATIONAL, INC.
COPYRIGHT 2006
WWW.SOLATUBE.COM

SOLATUBE
2210 OAK RIDGE WAY
VISTA, CALIFORNIA 92081-8341
PH (760) 597-4400

MATERIAL -- --	DRAWN BY STEVENS	DATE 9/12/07
FINISH --	CHECKED BY --	DATE --
DO NOT SCALE DRAWING	APPROVED BY --	DATE --

TITLE: SOLATUBE 290DS PITCHED SELF-FLASHING HARD CEILING (FS)

SIZE	DWG. NO.	REV
D	290DS-HC(FS)-SFP	A
	SCALE: 1:1	SHEET 1 OF 1