REVISIONS				
ECO	REV.	DESCRIPTION	DATE	INC.
	A	RELEASED	2/27/2004	

SOLATUBE 290DS COMPACT FLUORESCENT LIGHT KIT

NOTES:

1. DIMENSIONS IN BRACKETS ARE METRIC UNLESS OTHERWISE SPECIFIED.
2. 6" MINIMUM CLEARANCE SHOULD BE MAINTAINED FROM ALL SOLATUBE COMPONENTS AND OTHER PLENUM ELEMENTS.

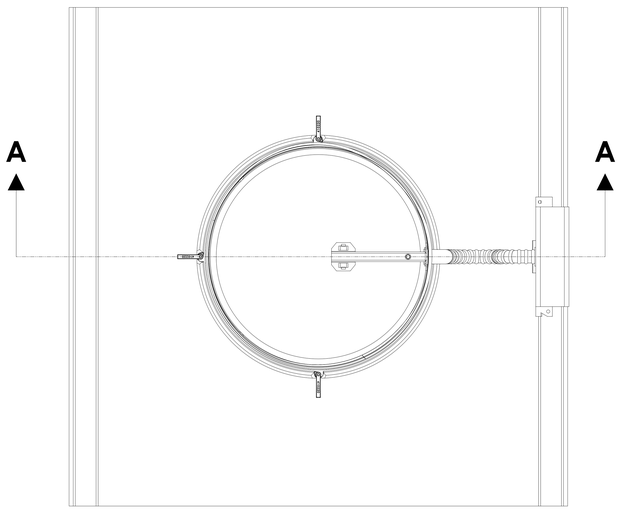

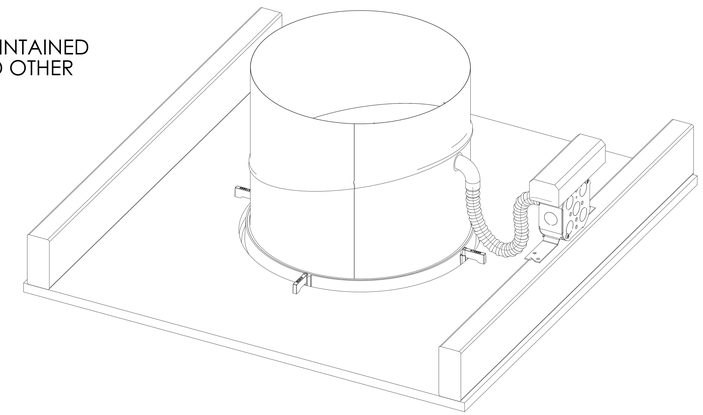

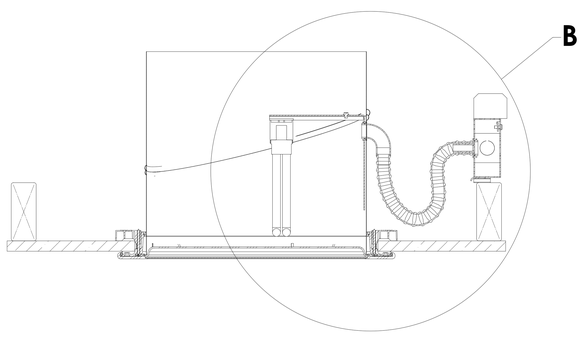

SECTION A-A

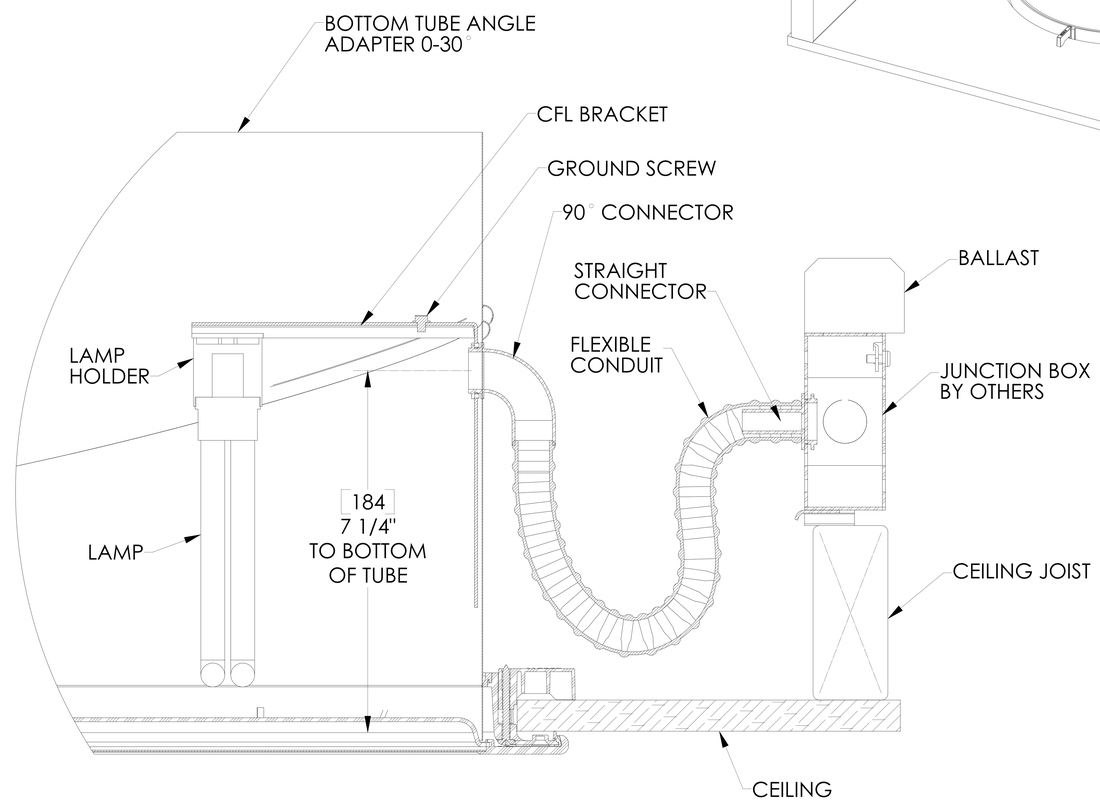

DETAIL B
SCALE 3 : 1

UNLESS OTHERWISE SPECIFIED: DIMENSION TOLERANCE FRACTION : ±1/4" INCH .X ± .1 MILLIMETER [.X] ± 2.5	SOLATUBE INTERNATIONAL, INC. COPYRIGHT 2006 WWW.SOLATUBE.COM	SOLATUBE 2210 OAK RIDGE WAY VISTA, CALIFORNIA 92081-8341 PH (760) 597-4400
MATERIAL -- --	DRAWN BY STEVENS / DATE 11/2/06	TITLE: SOLATUBE 290DS COMPACT FLUORESCENT LIGHT
FINISH --	CHECKED BY -- / DATE --	SIZE D / DWG. NO. 290DS-HC-CFL / REV A
DO NOT SCALE DRAWING	APPROVED BY GOODJOHN / DATE 11/7/06	SCALE: 1:1 / SHEET 1 OF 1