REVISIONS				
ECO	REV.	DESCRIPTION	DATE	INC.
	A	RELEASED	2/27/2004	

SOLATUBE 290DS PITCHED TILE FLASHING HARD CEILING

NOTES:

1. DIMENSIONS IN BRACKETS ARE METRIC UNLESS OTHERWISE SPECIFIED.
2. 6" MINIMUM CLEARANCE SHOULD BE MAINTAINED FROM ALL SOLATUBE COMPONENTS AND OTHER PLENUM ELEMENTS.

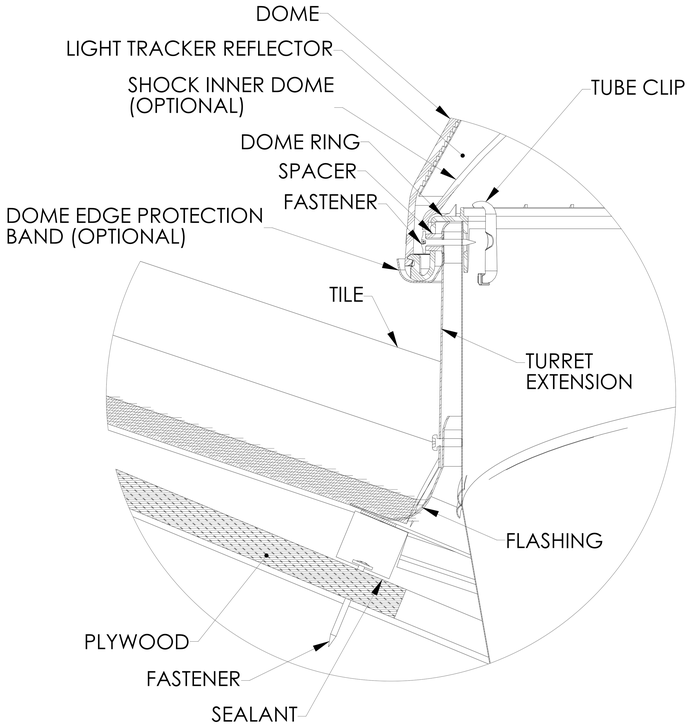

DETAIL A
SCALE 3 : 1

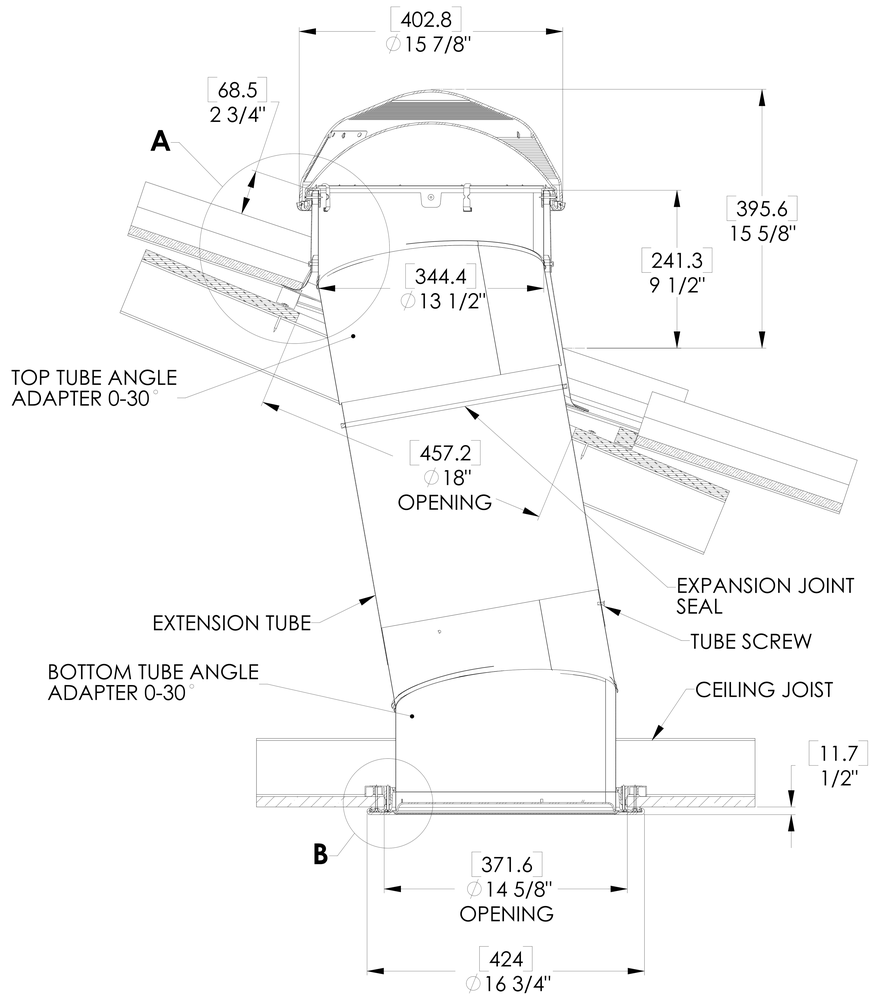

FULL SECTION
SCALE 1:1

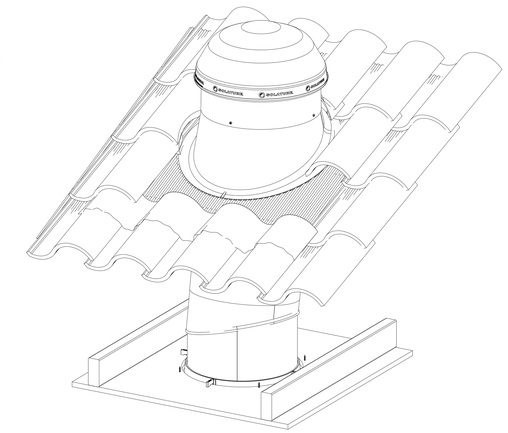

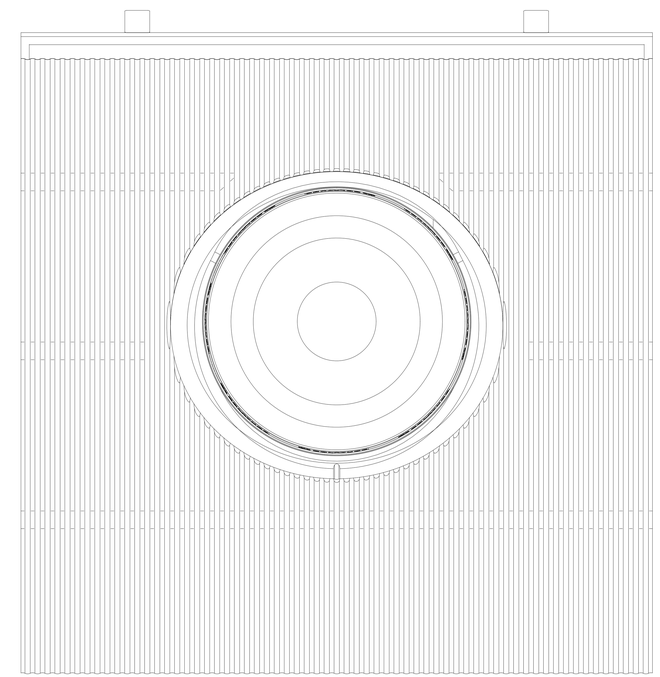

TOP VIEW

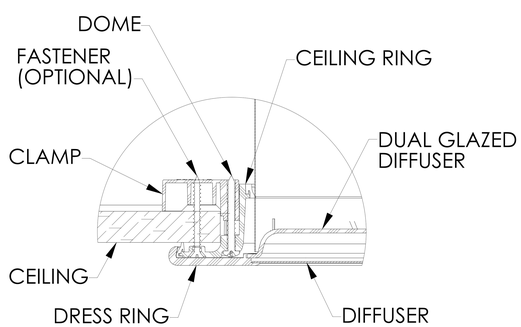

DETAIL B
SCALE 3 : 1

UNLESS OTHERWISE SPECIFIED:
DIMENSION TOLERANCE
FRACTION : ±1/4"
INCH .X ± .1 MILLIMETER [.X] ± 2.5

SOLATUBE INTERNATIONAL, INC.
COPYRIGHT 2006
WWW.SOLATUBE.COM

SOLATUBE
2210 OAK RIDGE WAY
VISTA, CALIFORNIA 92081-8341
PH (760) 597-4400

TITLE: 290DS PITCHED TILE FLASHING HARD CEILING

MATERIAL	DRAWN BY	DATE
-- --	STEVENS	11/2/06
FINISH --	CHECKED BY --	DATE --
DO NOT SCALE DRAWING	APPROVED BY GOODJOHN	DATE 11/7/06

SIZE	DWG. NO.	REV
D	290DS-HC-TILE	A
	SCALE: 1:1	SHEET 1 OF 1